FEATURED ALUM-A-LIFT

AIRCRAFT ENGINE INLET MANIPULATOR

PROJECT 28078

MODEL A1500CSLR-96

FEATURING Lifting fixture, powered shaft gripper with 360° rotation along axis, powered 90° knuckle, tilt-up safety switch

HANDLING 100 lb [45 kg] turbine engine inlets

DETAILS During the manufacturing of turbine engine inlets, the parts go through several machining, inspection, and coating steps. Alum-a-Lift created a universal adaptor system that makes managing the large diameter parts easier, allowing a single operator to do what used to require 4-5 people.

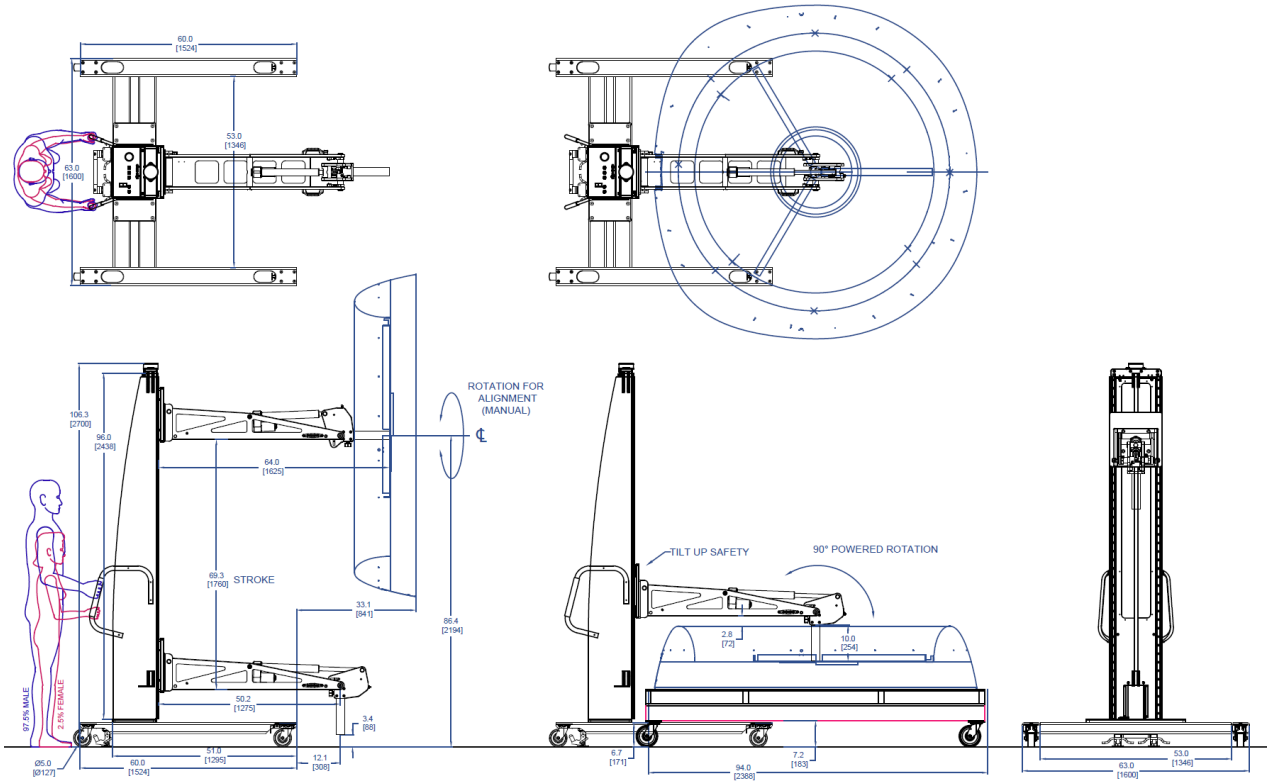

alum-a-lift
13941 Veterans Memorial Hwy
Winston, GA 30187 USA
+1 770 489 0328

GET STARTED AT **ALUM-A-LIFT.COM**